SCREEN MACHINE™ 514TS SPYDER SCREEN PLANT

AMERICAN-MADE INNOVATION SINCE 1966

SECONDARY SCREEN SUPERSTARS!

- 2-Deck And 3-Deck Options Available
- Proven Productivity And Dependability
- Patented Smooth Start® Technology

514TS SPECIFICATIONS

Height	11'-6"	*3.51m*
Length	52'-1"	*15.86m*
Width	9'-10"	*3.0m*
Total Weight	52,000 lbs.	*23,586Kg*

514TS3 SPECIFICATIONS

Height	11'-6"	*3.51m*
Length	52'-2"	*15.90m*
Width	10'-11"	*3.33m*
Total Weight	59,000 lbs.	*26,762Kg*

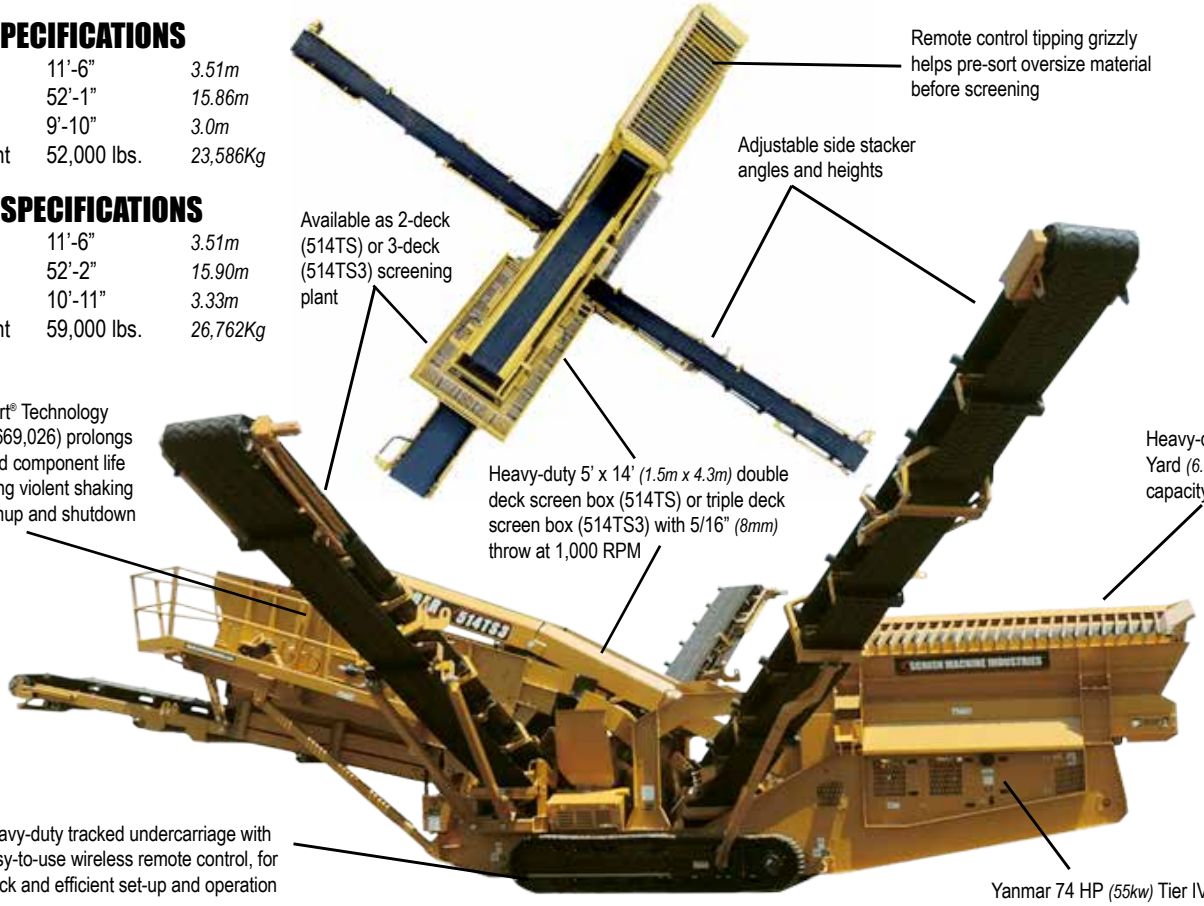

Remote control tipping grizzly helps pre-sort oversize material before screening

Adjustable side stacker angles and heights

Available as 2-deck (514TS) or 3-deck (514TS3) screening plant

Smooth Start® Technology (Patent #6,669,026) prolongs machine and component life by eliminating violent shaking during warmup and shutdown

Heavy-duty 5' x 14' *(1.5m x 4.3m)* double deck screen box (514TS) or triple deck screen box (514TS3) with 5/16" *(8mm)* throw at 1,000 RPM

Heavy-duty 8 Cu. Yard *(6.1 cu/m)* capacity hopper

Heavy-duty tracked undercarriage with easy-to-use wireless remote control, for quick and efficient set-up and operation

Yanmar 74 HP *(55kw)* Tier IV Final diesel engine

740-927-3464 · 800-837-3344 · WWW.SCREENMACHINE.COM

SCREEN MACHINE

514TS, 514TS3 Spyder Specifications

OPERATING DIMENSIONS

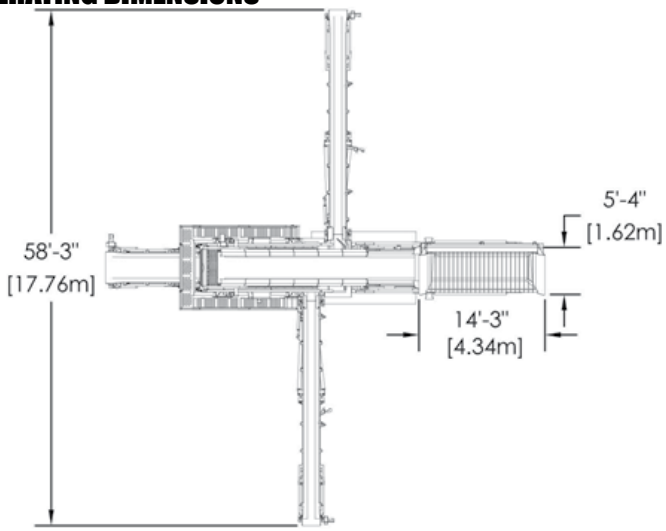

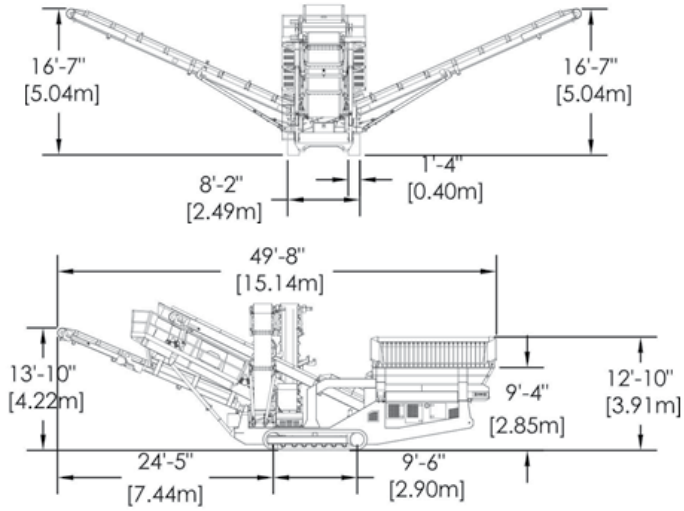

TRANSPORT DIMENSIONS

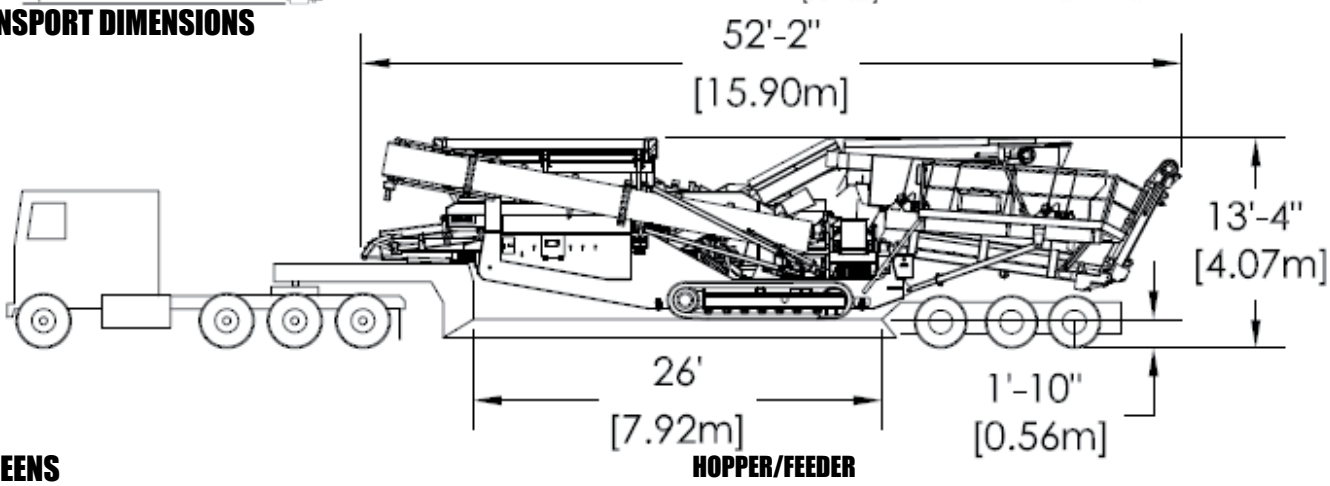

SCREENS

- 5'-0" x 14'-0" *(1.5m x 4.3m)* top deck, middle deck (514TS3 only)
- 5'-0" x 12'-0" *(1.5m x 3.7m)* bottom deck
- Double-deck, two-bearing screen
- Double deck adjustable screen angle (4 operating positions)
- 1/4" *(6.35 mm)* US-made grade 80 steel screen box walls
- *Smooth Start®* Technology (US Patent #6,669,026)
- Fines conveyor splits from screen box for easy maintenance
- Top deck side tension wire screen cloth (included)
- Bottom deck end tension wire cloth or harp deck screens (included)

POWER SYSTEMS and CONTROLS

- Yanmar® 74 HP *(55kw)* Tier IV Final diesel engine
- 75 gallon *(284L)* fuel tank with lockable fuel cap
- 125 gallon *(473L)* baffled hydraulic tank
- Oilair® hydraulic oil cooler
- Lockable control panels, toolbox
- Four (4) emergency stops plus (1) stop button on wireless remote
- Wireless remote control operation and travel up to 300' *(91m)*

UNDERCARRIAGE

- Heavy-duty tracks with 8" *(203mm)* ground clearance
- 15.7" *(400mm)* shoe width w/outside track dimension of 8'-2" *(2.49m)*
- Sealed and lubricated pins and bushings

HOPPER/FEEDER

- 1/4" *(6.35mm)* thick steel side walls
- 9 7/8" *(251mm)* center-to-center spacing on idlers
- 5" *(127mm)* diameter center idler cans
- 42" *(1,067mm)* wide 3 ply 330 PIW belt
- Hydraulic motor drive with 12" *(305mm)* lagged head pulley
- Low feed height - 9'-4" *(2.8m)* without grizzly
- Feed height of 12'-10" *(3.91m)* at high side of grizzly (3 height settings)
- 8 Cu. Yard *(6.1 Cu. Meter)* hopper capacity
- Feed opening 13'-0" x 5'-0" *(4m x1.5m)* without grizzly
- Feed opening 14'-0" x 5'-0" *(4.3m x1.5m)* with grizzly
- Variable speed feeder belt
- Feed Match: 3-4 yd³ loader or 1-3 yd³ excavator

MAIN/DISCHARGE WINDROW CONVEYORS

- 42" *(1,067mm)* main belt raises from screen box for maintenance
- Oversize and midsize discharge belts are cleated and variable speed
- 16'-6" *(5.04m)* oversize discharge height (24" *(610mm)* Belt Width)
- 13'-10" *(4.22m)* fines discharge height (42" *(1,067mm)* Belt Width)
- 16'-6" *(5.04m)* midsize discharge height (24" *(610mm)* Belt Width)
- 16'-6" *(5.04m)* small Mids (514TS3 only) (24" *(610mm)* Belt Width)
- Side discharge belt angles: 18°, 21°, 24°
- Fines belt adjustable up to 23°
- All belts feature standard guide idlers for centered belt tracking

514TS

Height	Length	Width	Weight	Top Deck	Bottom Deck	Conveyor Widths Oversize	Conveyor Widths Midsize	Conveyor Widths Fines	Discharge Heights Oversize	Discharge Heights Midsize	Discharge Heights Fines	Engine	Tracks	Fuel Capacity	Hydraulic Capacity
11'-6"	47'-6"	9'-11"	59,000lbs	5'-0"x16'-0"	5'-0"x14'-0"	48"	24"	36"	9'-4"	13'-0"	12'-6"	Cat C4.4	20" wide	75gal	120gal
3.51m	*14.48m*	*2.9m*	*26,762kgs*	*1.52m x4.88m*	*1.52m x4.27m*	*1,219mm*	*610mm*	*914mm*	*2.84m*	*3.96m*	*3.81m*	110 HP *82kw*	*500mm*	*284L*	*454L*

514TS3

Height	Length	Width	Weight	Top Deck	Bottom Deck	Conveyor Widths Oversize	Conveyor Widths Lg Mids	Conveyor Widths Sm Mids	Conveyor Widths Fines	Discharge Heights Oversize	Discharge Heights Lg Mids	Discharge Heights Sm Mids	Discharge Heights Fines	Engine	Tracks	Fuel Capacity	Hydraulic Capacity
11'-6"	47'-6"	9'-11"	59,000lbs	5'-0"x16'-0"	5'-0"x14'-0"	48"	24"	24"	36"	9'-4"	13'-0"	16'-6"	12'-6"	Cat C4.4	20" wide	75gal	120gal
3.51m	*14.48m*	*2.9m*	*26,762kgs*	*1.52m x4.88m*	*1.52m x4.27m*	*1,219mm*	*610mm*	*610mm*	*914mm*	*2.84m*	*3.96m*	*5.04m*	*3.81m*	110 HP *82kw*	*500mm*	*284L*	*454L*